Fire Tests for Evaluating Wire & Cable Flammability

Scope:

- *Fire Action and Cable Fires*
- *Performance of Cable Flame Tests*
- *Cable Fire Tests*
  - *NFPA 262 Plenum Steiner Tunnel Test*
  - *UL 1666 Riser Cable Fire Test*
  - *UL 1685 Vertical Tray Tests*
  - *UL 1581 / UL 2556 VW-1 Vertical Flame Test*
- *FR Material Implications*
- *Conclusions*

Mechanism of Fire Action

- Fire Triangle - three essential ingredients
  - Heat
  - Fuel
  - Oxygen

- Combustion of cable materials lead to production of heat (and smoke)

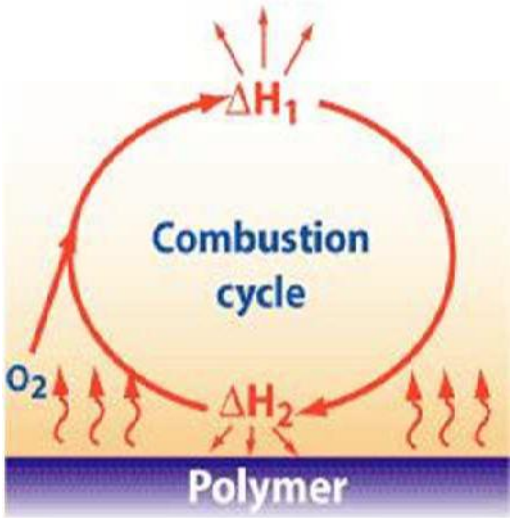

- Fraction of heat (H1) is lost to the surroundings through radiation and convection
- The heat feedback (H2) pyrolyzes the polymers and promotes the further combustion resulting in flame spread and smoke generation

Fire Spread in Buildings due to Cabling

- Dusseldorf Airport, Germany, April, 1996
- Rockefeller Center, USA, October, 1996
- Garley Building, Hong Kong, November, 1996
- Bangkok President Tower, Thailand, Feb., 1997
- Credit Lyonnais Bank, France, May, 1997
- Heathrow Airport, UK, December, 1997
- Mont Blanc Tunnel, Switzerland, March, 1999

Credit Lyonnaise Bank, France

A series of large building fires have occurred that demonstrate the hazards of highly combustible materials (cable) in concealed spaces.

Performance Of Fire Cable Tests

- **Evaluation of fire performance of cables can be achieved with different large scale fire test methods, depending on the degree of fire resistance required for a given installation.**

- **In accordance with the fire safety requirements, the criteria of cable fire tests may include**:
  - Fire spread
  - Heat release
  - Smoke/gases production: sufficient visibility to permit escape and reduce the release of lethal gases

Cabling Paths in a Building

Cables run through open or concealed, vertical and horizontal passages in a building. These route(s) can facilitate flame and/or smoke movement

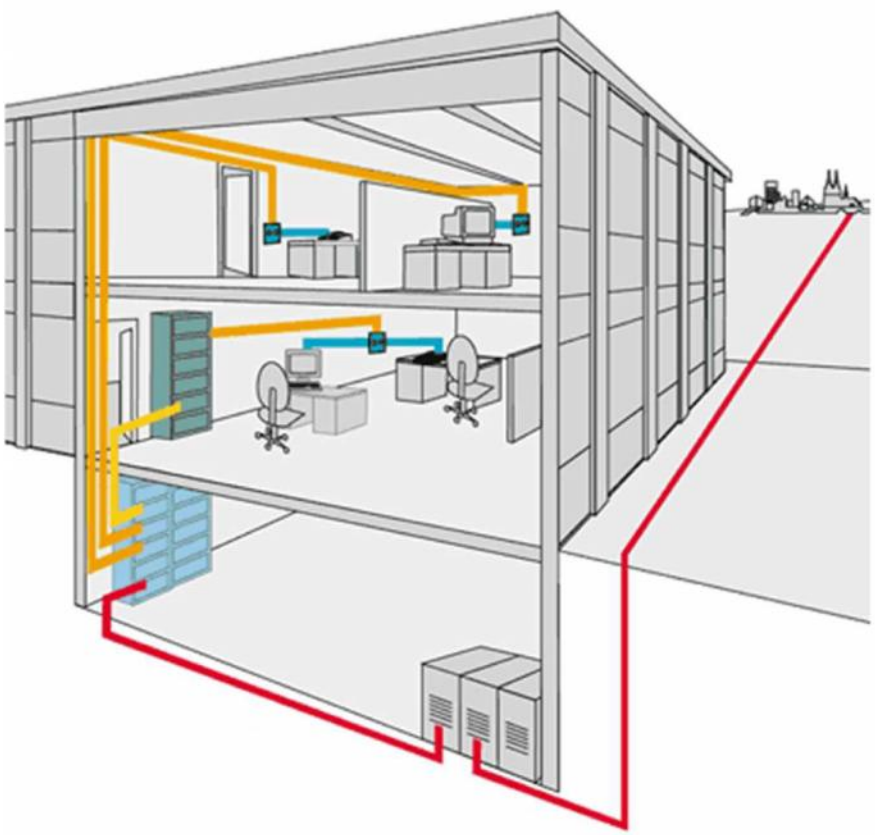

Source: http://www.hubersuhner.ca

Requirements of Data Communication Cables

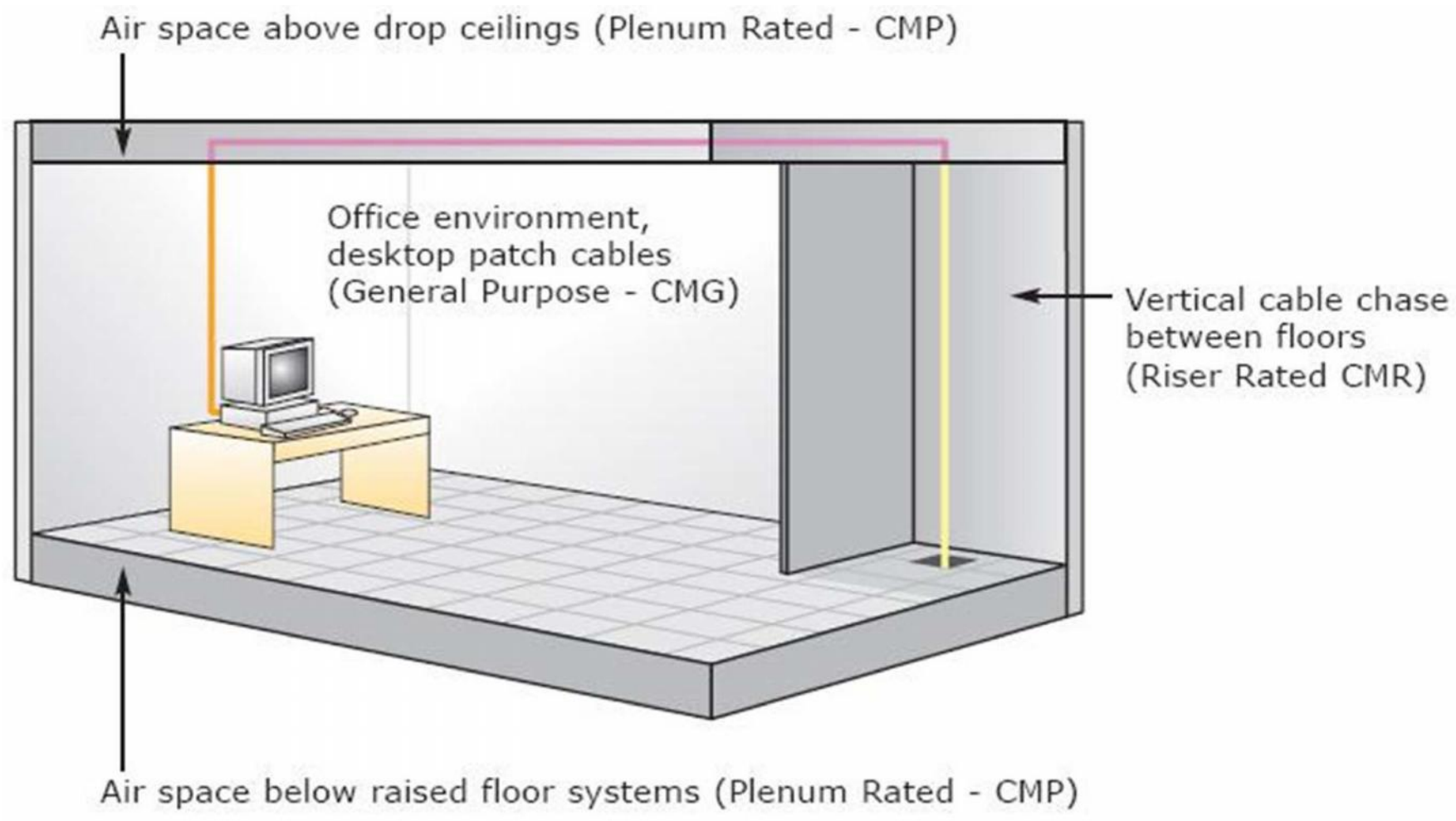

Cable Flame Tests Ranked by Severity

1. NFPA 262 Plenum Steiner Tunnel Test
   - A large scale fire test, used to determine values of **flame propagation** distance and **optical smoke density** of plenum cables
2. UL1666 Riser Cable Fire Test
   - A large scale fire test used to determine the **flame propagation** characteristics of riser cables
3. UL 1685 Vertical Tray Tests
   - A large scale fire test used to determine values of **cable damage height** and **smoke release** (UL 1685) from general purpose cables,
4. UL 1581 / UL 2556 VW-1 Vertical Flame Test
   - A small scale, single cable fire test used to determine the resistance of wire, cable, and cordage to the **vertical propagation of flame** and **dripping of flaming particles**

Fire Tests for Data Communication Cables

Fire Test	Gas Burner	Orientation	Duration	Application
NFPA 262 Plenum Steiner Tunnel Fire Test	Methane, 86 kW	Horizontal cable tray	20 minutes	Plenum cable CMP, OFNP
UL 1666 Riser Cable Fire Test	Propane, 154.5 kW	Vertical	30 minutes	Riser cable CMR, OFNR
UL 1685 Vertical Tray Test	Propane, 20.6 kW	Vertical cable tray	20 minutes	General purpose cable CM, OFN
VW-1 Vertical Flame Test	Methane, 500 W	Vertical single cable	15 seconds x 5 cycles	Restricted cable CMX

NFPA 262 Steiner Tunnel

NFPA 262 Design Test

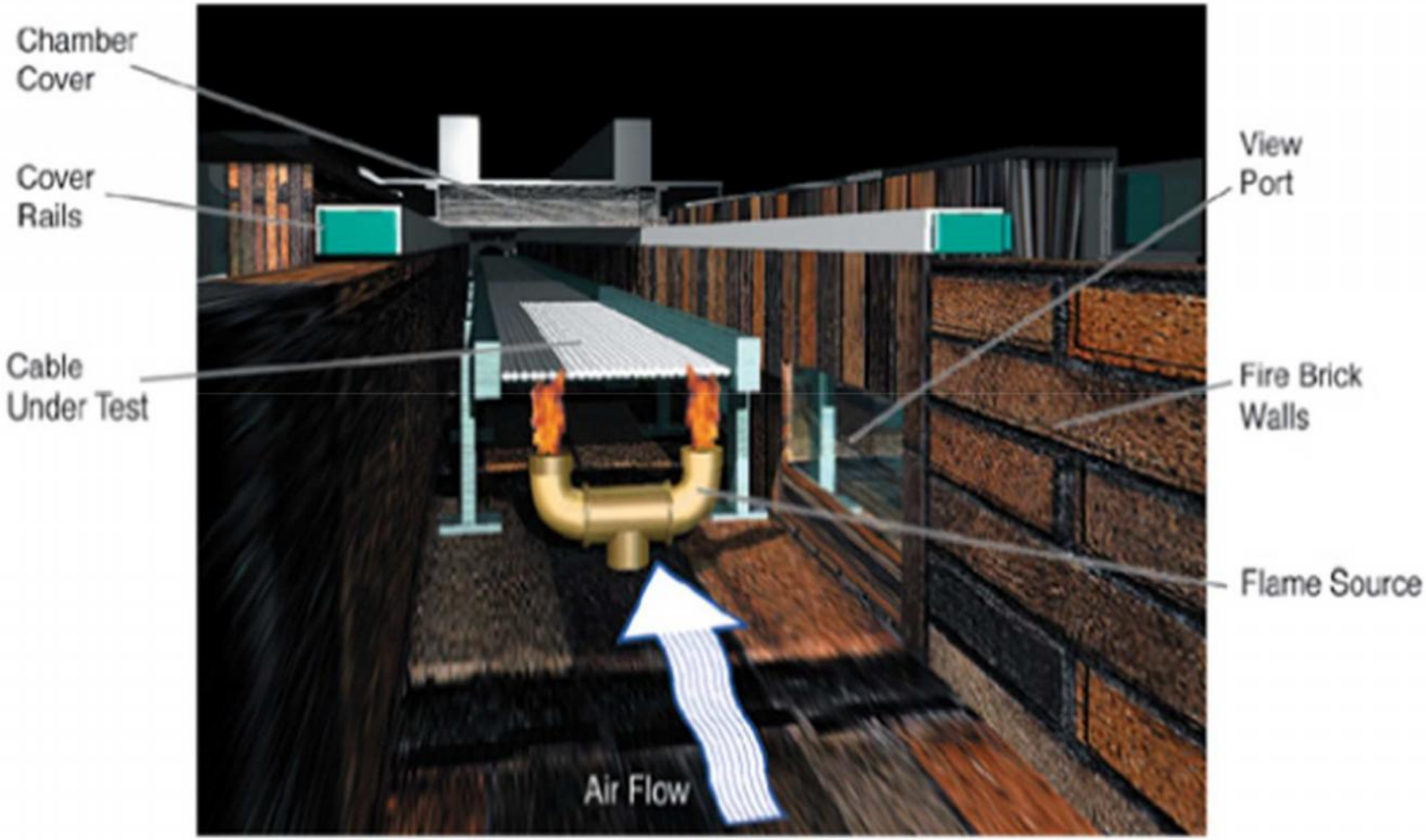

UL 1666 Riser Test and Facility

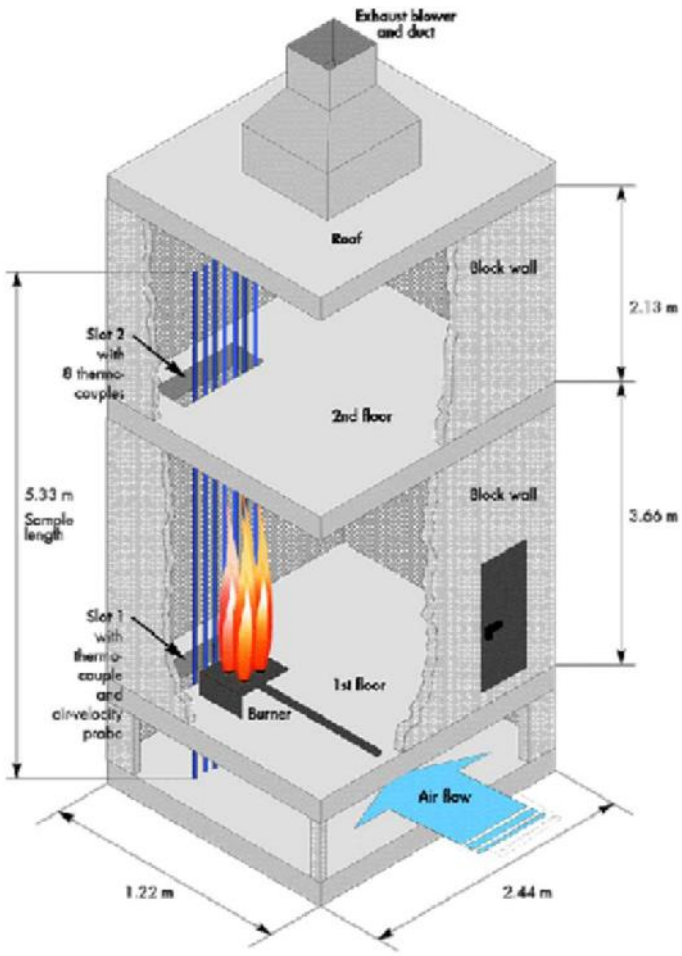

UL 1685 Vertical Tray Test Facility

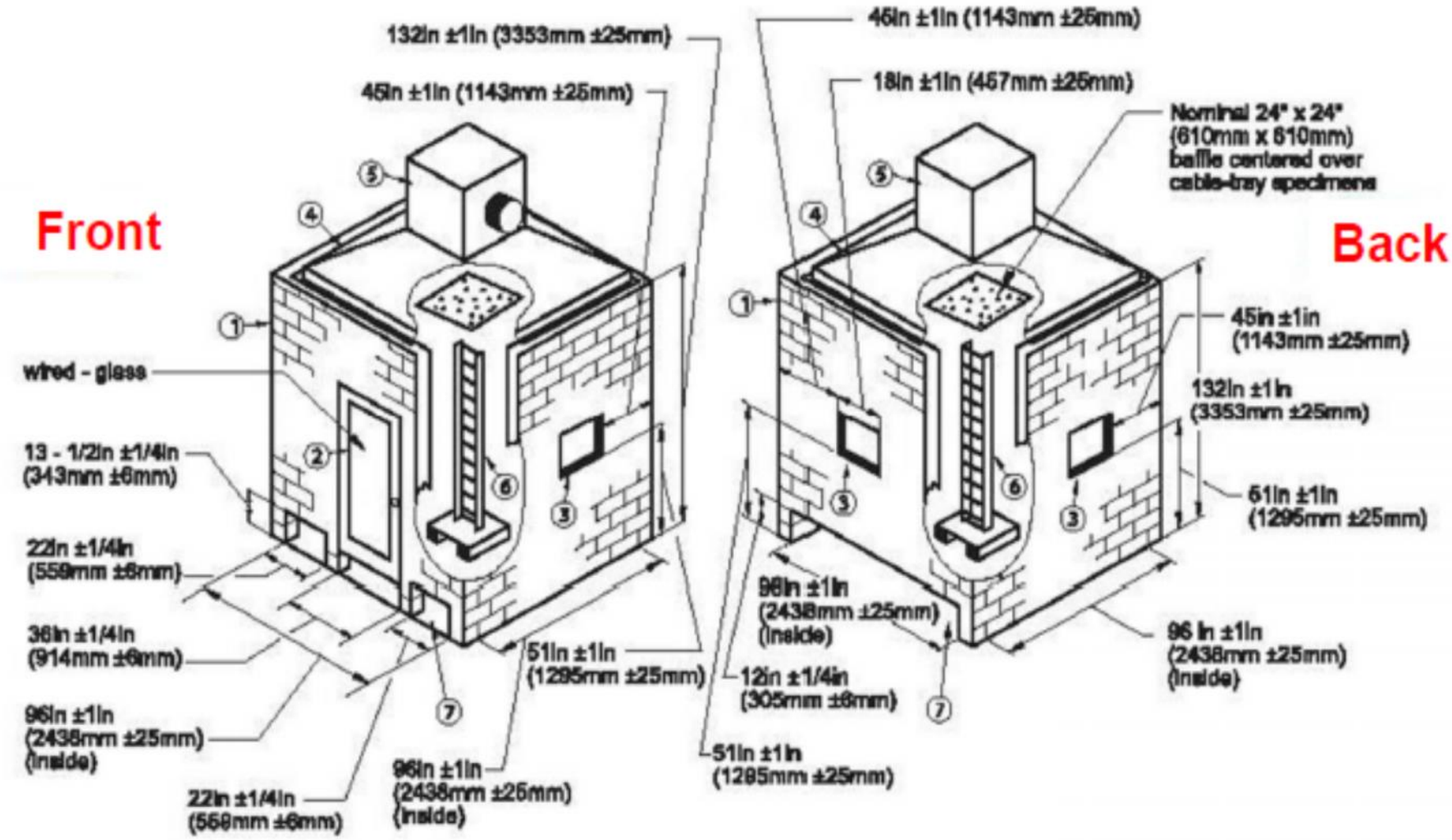

UL 1685 Vertical Tray Test Facility

VW-1 Vertical Flame Test Equipment

Flame Application on Vertical Specimen

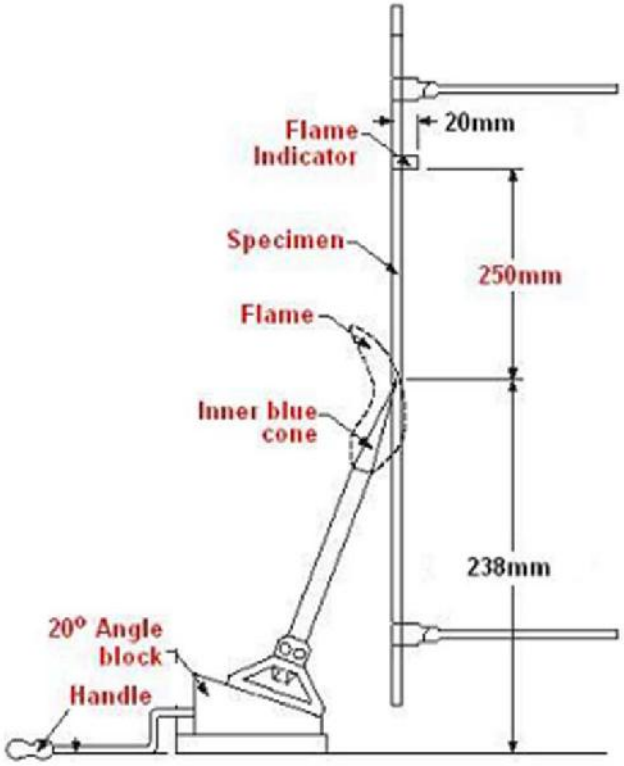

SUMMARY

- Different building spaces present unique fire risks to cable. It is essential to identify these risks and install the correct cable based upon local fire (and smoke) requirements.
- Large and small-scale cable fire tests are valuable tools to assess fire and smoke performance. These tests allow the evaluation of new materials and designs to reduce cable fire risks.
- More complex and higher performance materials are required to pass Plenum and Riser cable fire tests due to the severity of the test and the pass/fail requirements.
- UL has developed a wide array of tests to assess cable fire performance to ensure building safety

MARKET SURVEY DATA

- Market survey for Telecom Cables conducted
- All samples selected from AP region manufacturers failed “catastrophically”
- Analytical testing showed that there was an absence of flame retardant and smoke suppressant properties in the materials used to construct the cables

About Underwriters Laboratories

- Underwriters Laboratories (UL) is an independent standards writing and product safety certification organization that has been testing products and writing Standards for Safety for over a century

CB Scheme

A Century of Safety Standards 1903 – 2003

A mission focused on making the world a safer place

Global Office Locations

Europe

- Denmark
- Finland
- France
- Germany
- Italy
- Netherlands
- Poland
- Spain
- Sweden
- Switzerland
- United Kingdom

North and South America

- United States
- Canada
- Argentina
- Brazil
- Mexico

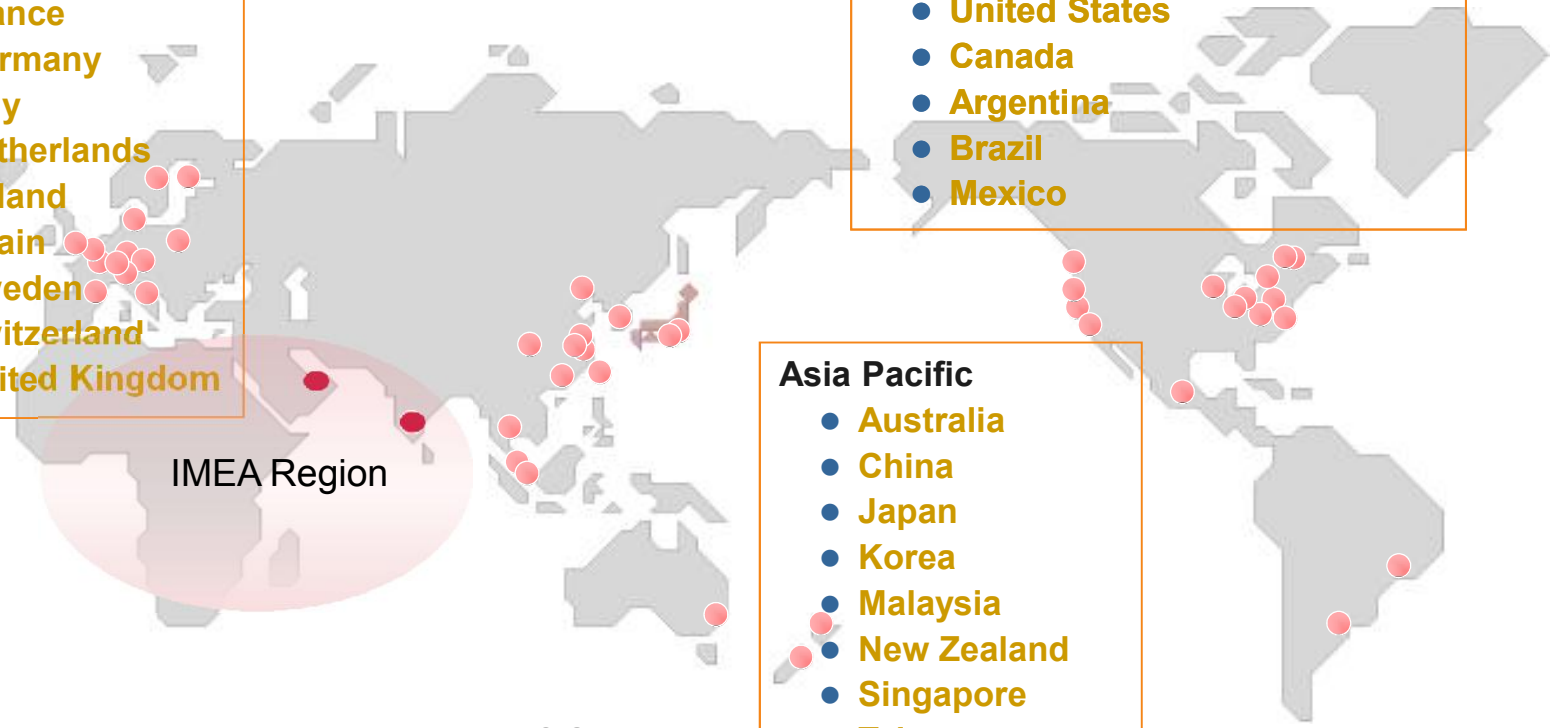

Asia Pacific

- Australia
- China
- Japan
- Korea
- Malaysia
- New Zealand
- Singapore
- Taiwan
- Thailand
- India
- **DUBAI**

Underwriters Laboratories ME FZCO
Dubai Airport Free Zone, UAE

UL facts and figures

- 22 billion UL Marks on products
- 75,542 manufacturers of UL certified products
- 98,454 evaluations of products in UL laboratories
- 19,450 different types of products evaluated by UL
- 126 UL Inspection Centers worldwide
- 99 countries with UL customers
- 1,201 current standards of the UL family of companies
- 62 testing and certification facilities worldwide
- 7,000 staff in the UL family of companies working for public safety

UL's 5 Business Units – expanded portfolio

Product Safety

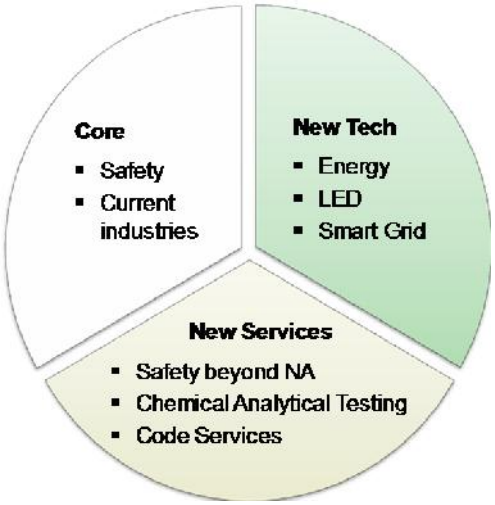

Verification Services

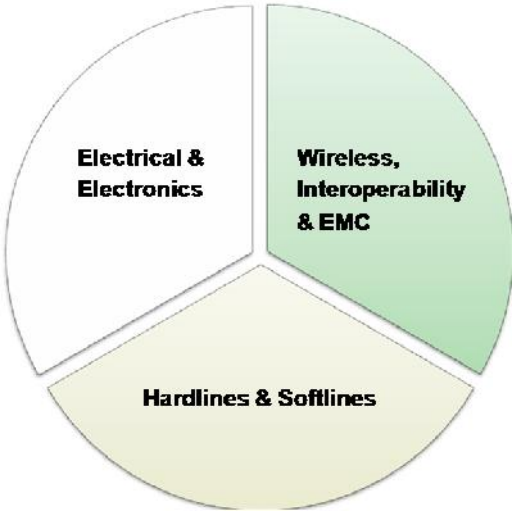

Life &Health Sciences

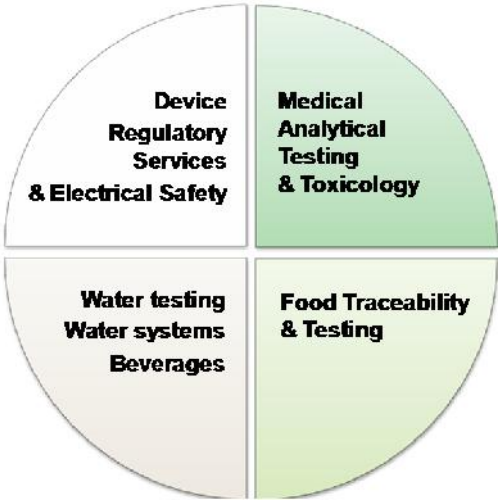

UL Environmental Services

UL University

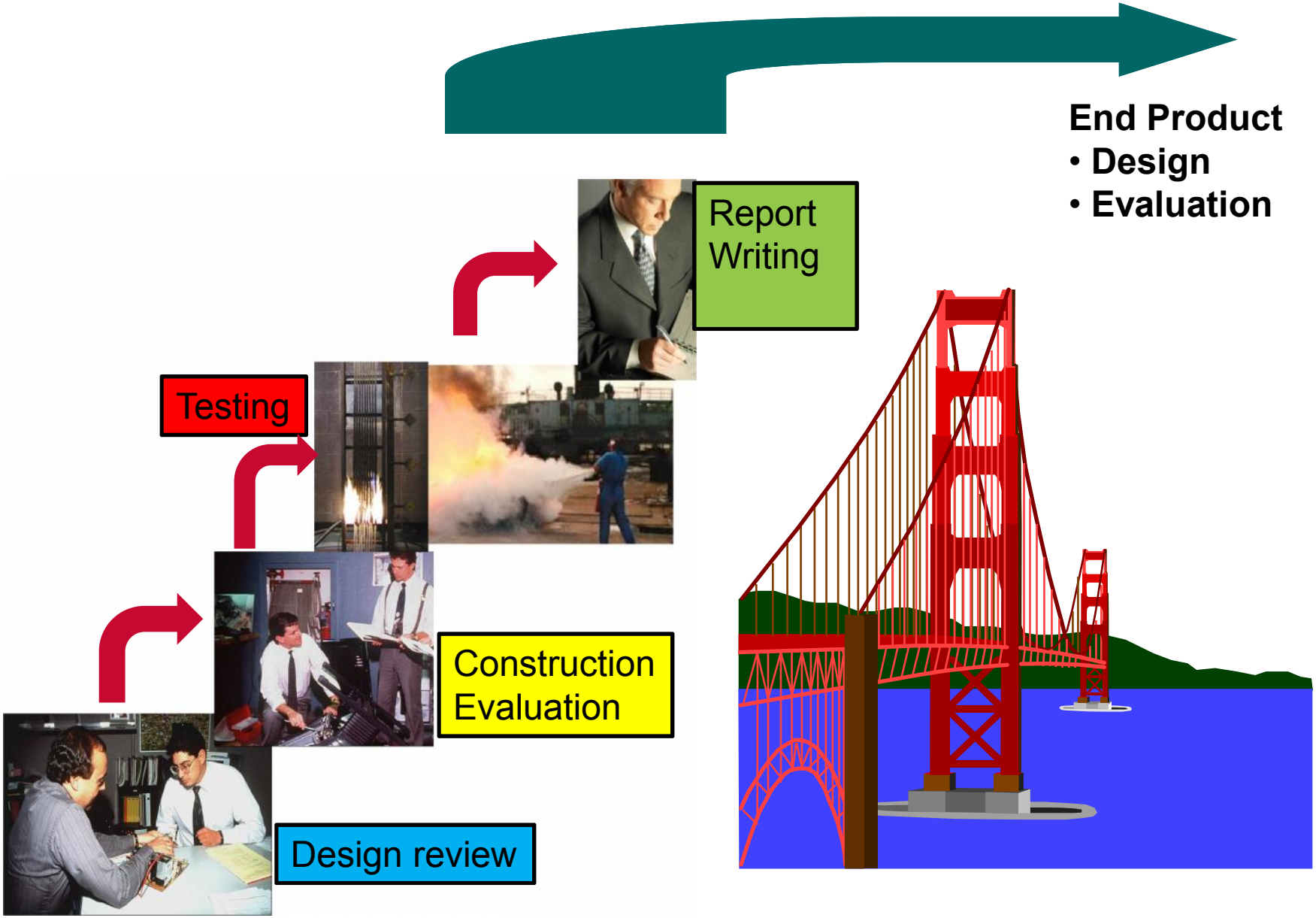
End Product
• Design
• Evaluation
Report Writing
Testing
Construction Evaluation
Design review

Quotes from CCCA Articles

- “A disturbing growing trend of substandard Category cables from certain “no name” cable producers in China and Taiwan being sold in the U.S. and other regions has led to an initiative by a relatively new industry association that wants such fraud to stop.”
- “Observed the CCCA press release, “We believe that the manufacturers of these failing products are using substandard materials for profit motives, without regard to the safety of building inhabitants.”
- “The amount of substandard cable coming through could be in the millions of feet per year, he said, acknowledging that there is no way of knowing for sure.”
- “He added that this is an issue that is not going to go away, and that it is possible that some government agency, once aware of the risk to public safety, could take decisive and very public action that makes a clear statement to all concerned how important this issue is.”

CONTENTS

EFFORTS TO STOP BAD CABLES 11

PLANT TOUR IN TURKEY 46

The New Wire Drawi

Universal
The most commonly utilized die system in the world today.

Efficient
Maximizes die performance, increasing machine utilization and decreasing production costs.

Practical
Simple design makes the system easy to use.

PARAMOUNT DIE

8 | WIRE JOURNAL INTERNATIONAL

INDUSTRY NEWS

CCCA: 1 year later, flow of sub-par cables to U.S. continues; UL reports measures to counter the problem

Samples of holograms that UL plans to require be placed on boxes containing telecom cables.


SUPERIOR ESSEX
November 2009 e-newsletter
The Wire Association International, Inc.
PR Newswire
Independent Testing Indicates That Fire Safety Risk Remains High
Produced Offshore
Home Technology DIY
Alarms, Remote Access, Security Cameras and More...
HOME
DIY ARTICLES
FORUM
IT News Online
Bullet Advisory Indian Stocks
Accu-Tech
Accu-Insider -- News, Pro
CCCA Study- Offshore Cat
FUSED NETWORK
High Quality
Cabling Installation & Maintenance
Offshore-made cables still fail on fire safety, says CCCA; new quality measures are pending
ccca
Offshore-made cable
new quality measures are pending
facilities
New Study Finds
Fire Hazard

THANK YOU ALL FOR YOUR ATTENTION